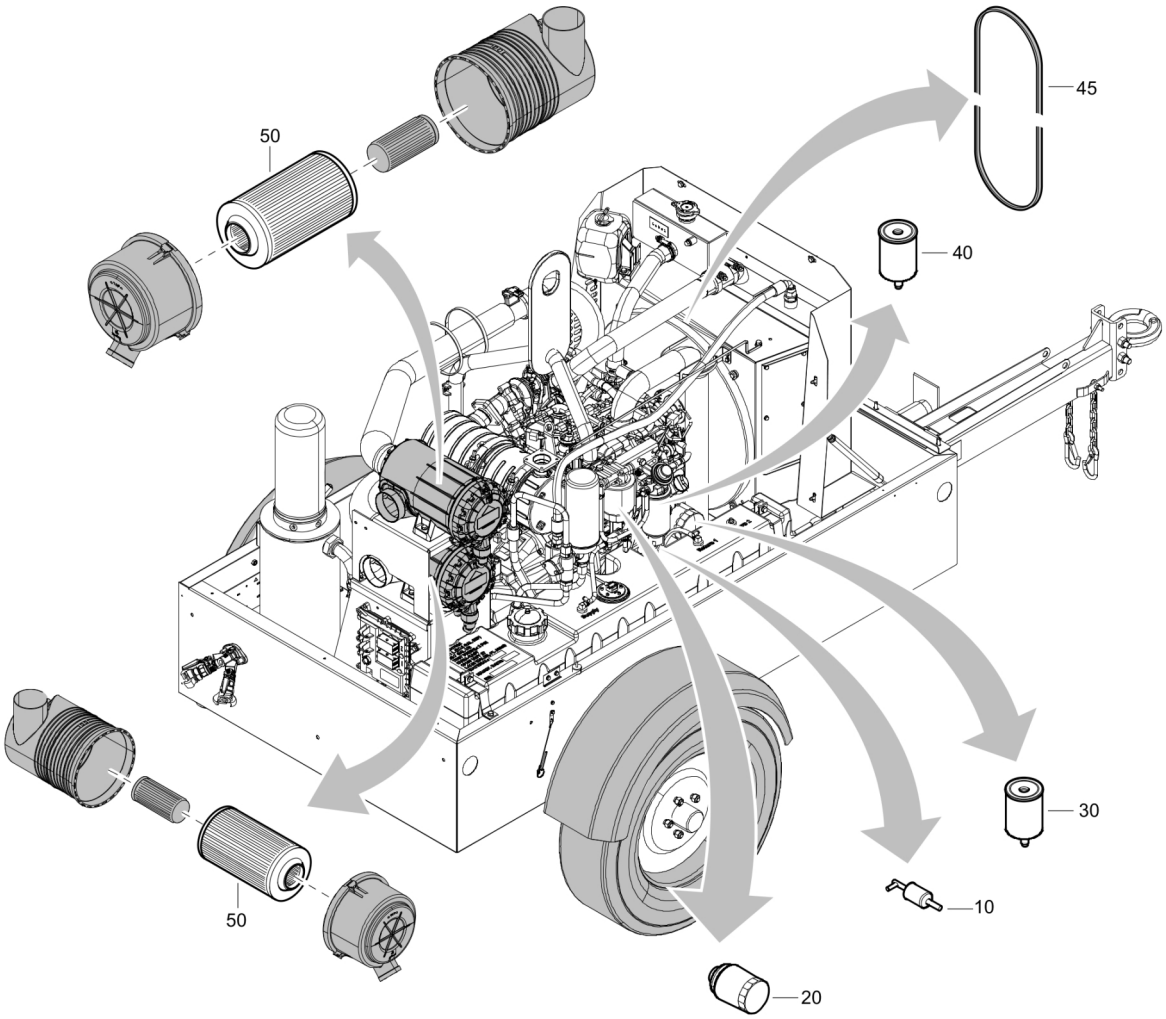



For the most recent information please visit Parts Online website. The information in this pdf can be outdated.
© 2026 Atlas Copco Power Technique AB

**Part assemblies** PAK: 500 HR XAS 188 KD8

| PartNo | Pos | Qty | ▯ ▯ | ▯ ▯ |
|---|---|---|---|---|
| 1310031580 | 10 | 1 PC | FILTER:DIESEL PRE-FUEL XAS90 | ▯ ▯ ▯ ▯ ▯ ▯ ▯ ▯ ▯ ▯ ▯ ▯ 1310266397 PAK: 500 HR XAS 188 KD8, 1310300375 SERVICE KIT (500H), 1310923095 OIL FILTER, 1310923096 PAK 1000HR 185 KD7/KDU8 T4, 1310923021 PAK 250HR XAS 185 T4I KD7, 1310312931 KIT:1000HR XAS 185 CDU7, 1310923003 PAK 50HR XAS, 1310300430 PAK 250HR XAS 185 CD7, 1310923023 SERVICE KIT (1000H), 1310923022 SERVICE KIT (500H), 1310923865 PAK 500HR XAS 185 CD7 T4F, 1310923005 SERVICE PAK 1000 HOURS, 1310300431 PAK 500HR XAS 185 CD7, 1310300374 SERVICE KIT (250H), 1310312641 KIT:0500HR QAS 45 KD, 1310923360 PAK INITIAL 50 HR 185+ KD, 1310313080 KIT:0500HR QAS 20/25, 1310312930 KIT:0500HR XAS 185 CDU7, 1310313081 KIT:1000HR QAS 20/25, 1310312532 KIT:0500HR XAS185 JDU7, 1310312639 KIT:0500HR XAS300 JDU7, 1310923094 Service pak 50/250/750 hours, 1310266513 Service pack 1500 hours, 1310266398 PAK: 1000 HR XAS 188 KD8, 1310312642 KIT:1000HR QAS 45 KD, 1310923361 PAK 500HR XAS 185+ KD, 1310923362 PAK 1000HR XAS 185+ KD, 1310923866 Service pak 1000 hours, 1310312640 KIT:1000HR XAS300 JDU7, 1310300432 PAK 1000HR XAS 185 CD7, 1310312584 KIT:1000HR XAS185 JDU7, 1310300373 SERVICE KIT (1000H) |


For the most recent information please visit Parts Online website. The information in this pdf can be outdated.
© 2026 Atlas Copco Power Technique AB

| | | | | |
|---|---|---|---|---|
| 2913307200 | 20 | 1 PC-Piece | FILTER OIL | 2912638306 SERVICE PAK 1000 H QAS14-20 KD, 1310266397 PAK: 500 HR XAS 188 KD8, 2912638205 SERVICE PAK 500 H QAS14-20 KD, 2912500402 500 HR SERV. PACK, 1310923095 OIL FILTER, 1310923096 PAK 1000HR 185 KD7/KDU8 T4, 2912500403 1000 HR SERV. PACK, 1636311035 SERVICE KIT 500H, 1310923021 PAK 250HR XAS 185 T4I KD7, 1636311038 SERVICE KIT 1500H, 1310923003 PAK 50HR XAS, 1310923023 SERVICE KIT (1000H), 1310923022 SERVICE KIT (500H), 1636310397 SERVICE PACK 500 HOURS, 1310923005 SERVICE PAK 1000 HOURS, 1310923360 PAK INITIAL 50 HR 185+ KD, 2911000006 1000 HR SERV. PACK BOX2.4LRC, 1310313080 KIT:0500HR QAS 20/25, 1310313081 KIT:1000HR QAS 20/25, 1636310399 Service pak 2000 hours, 1636310398 SERVICE PACK 1000 HOURS, 1625001072 SERVICE PAK 1000 H QAS14-20 KD, 2911000005 500 HR SERV. PACK BOX2.4LRC, 3002608940 U3 SERVICE PACK 1000H, 3002610220 SERVICE PAK 400H, 3002608930 U3 SERVICE PACK 500H, 3002608950 U3 SERVICE PACK 1500H, SERVICE PACK 1000 HOURS, 1636310593 SERVICE PAK 500H QAS35 VSG, 1310923094 Service pak 50/250/750 hours, 1310266513 Service pack 1500 hours, SERVICE PACK 2000 HOURS, SERVICE PACK 500 HOURS, SERVICE PACK 250 HOURS, 1636310594 SERVICE PAK 1000H QAS35 VSG, 1636310515 OIL FILTER ENGINE 10X, 1310266398 PAK: 1000 HR XAS 188 KD8, 1636311208 SERVICE KIT (1000H), 1636311207 SERVICE KIT (500H), 1310923361 PAK 500HR XAS 185+ KD, 1310923362 PAK 1000HR XAS 185+ KD |
| 2913320003 | 30 | 1 | FILTER FUEL | 1310266397 PAK: 500 HR XAS 188 KD8, 2912448404 SERVICE KIT 500HR, 2912500402 500 HR SERV. PACK, 1310923095 OIL FILTER, 1310923096 PAK 1000HR 185 KD7/KDU8 T4, 2912500403 1000 HR SERV. PACK, 1636311035 SERVICE KIT 500H, 1636311038 SERVICE KIT 1500H, 1310923005 SERVICE PAK 1000 HOURS, 1310266513 Service pack 1500 hours, 1310266398 PAK: 1000 HR XAS 188 KD8, 1310923361 PAK 500HR XAS 185+ KD, 1310923362 PAK 1000HR XAS 185+ KD |
| 2913320002 | 40 | 1 | FILTER FUEL WATER SEPARATOR | 1310266397 PAK: 500 HR XAS 188 KD8, 2912500402 500 HR SERV. PACK, 1310923095 OIL FILTER, 1310923096 PAK 1000HR 185 KD7/KDU8 T4, 2912500403 1000 HR SERV. PACK, 1310923005 SERVICE PAK 1000 HOURS, 1310266513 Service pack 1500 hours, 1310266398 PAK: 1000 HR XAS 188 KD8, 1310923361 PAK 500HR XAS 185+ KD, 1310923362 PAK 1000HR XAS 185+ KD |


© 2026 Atlas Copco Power Technique AB

| | | | | |
|---|---|---|---|---|
| 1310075269 | 45 | 1 | BELT-FAN:KUB D1803T, 38.5" V | 1310266397 PAK: 500 HR XAS 188 KD8,<br>1310266513 Service pack 1500 hours,<br>1310266398 PAK: 1000 HR XAS 188 KD8,<br>1310923361 PAK 500HR XAS 185+ KD |
| 1310218650 | 50 | 2 | ELEMENT: AIR CLEANER AC | 1310266397 PAK: 500 HR XAS 188 KD8,<br>1310266417 PAK: 500 HR XAS 188 CD8,<br>2912500005 SERVICE KIT 1000 HOURS,<br>2912452706 SERVICE KIT 1000HR,<br>1310266513 Service pack 1500 hours,<br>1310266398 PAK: 1000 HR XAS 188 KD8,<br>2912448405 SERVICE KIT 1000HR,<br>1310266418 Service pack 1500 hours |


For the most recent information please visit Parts Online website. The information in this pdf can be outdated.
© 2026 Atlas Copco Power Technique AB